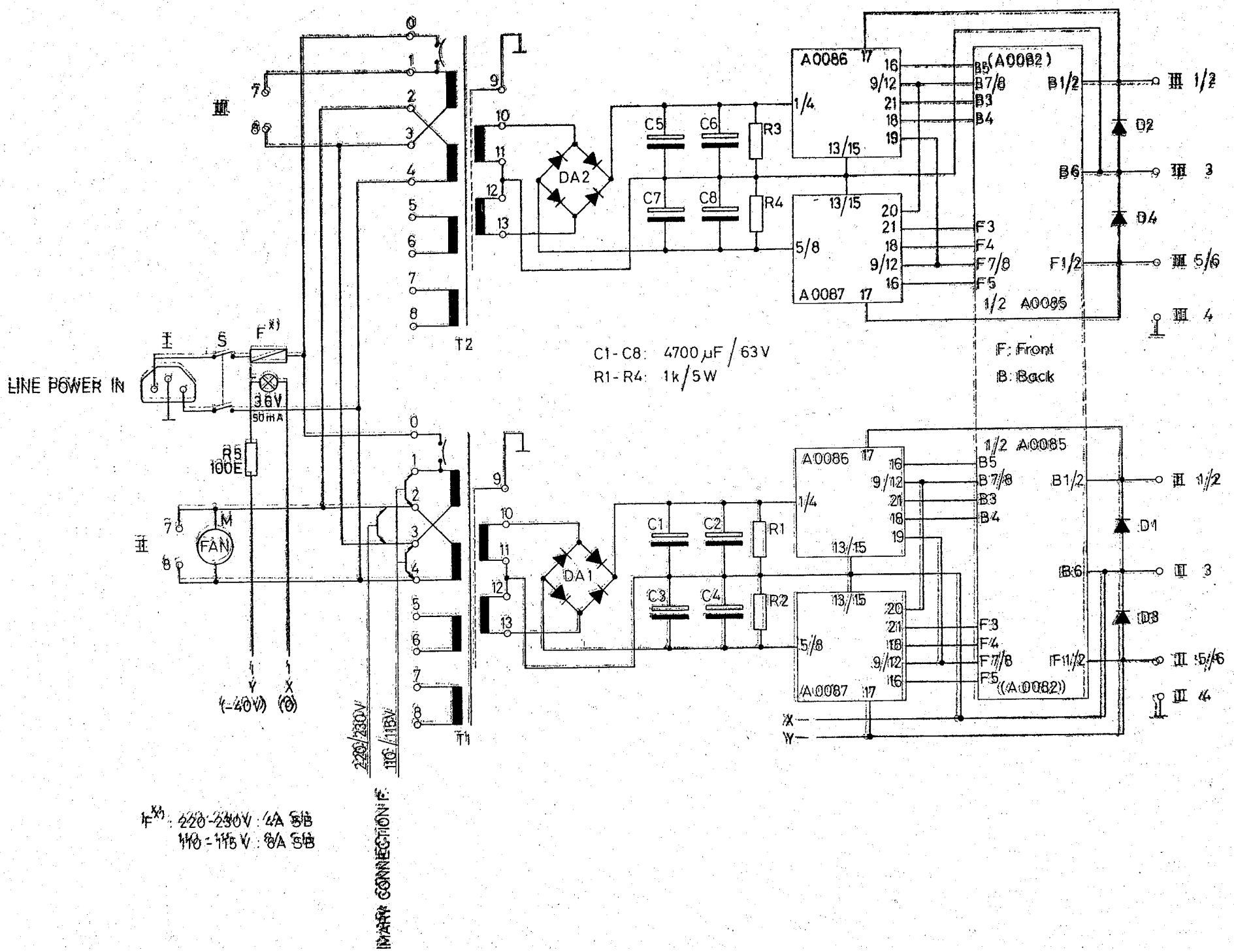
LINE POWER IN
S
F x)
36V
50mA
R5
100E
M
FAN
T2
T1
DA2
DA1
C5
C6
C7
C8
C1
C2
C3
C4
R3
R4
R1
R2
A0086
A0087
(A0082)
1/2 A0085
B5
B7/8
B3
B4
B1/2
B6
F3
F4
F7/8
F5
F1/2
D2
D4
D1
D3
C1-C8: 4700 µF / 63V
R1-R4: 1k / 5W
F: Front
B: Back
(-40V)
(0)
220/230V
110/115V
MAIN CONNECTION F
F x): 220-230V : 4A SB
110-115V : 8A SB